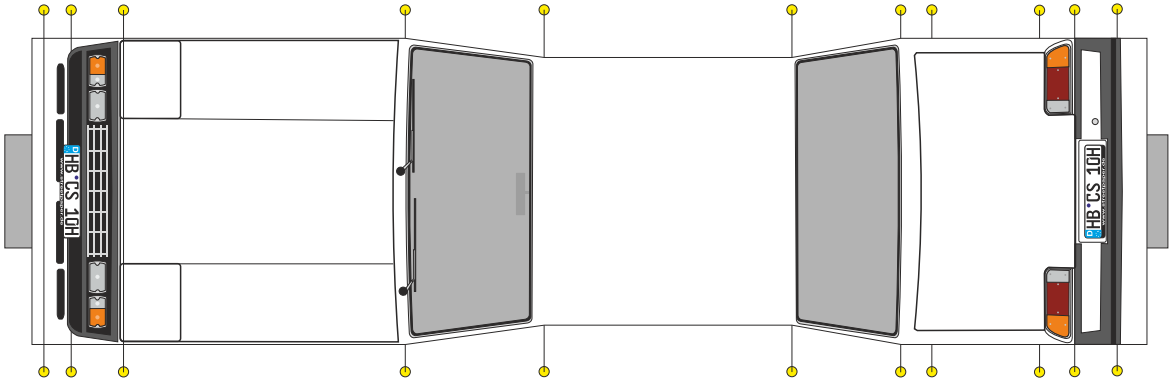
HB CS 10H
HB CS 10H

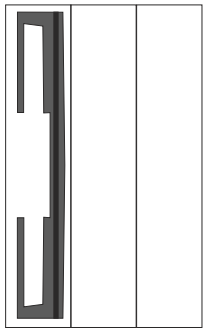

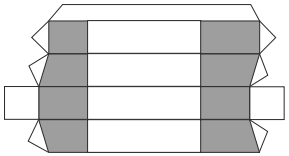

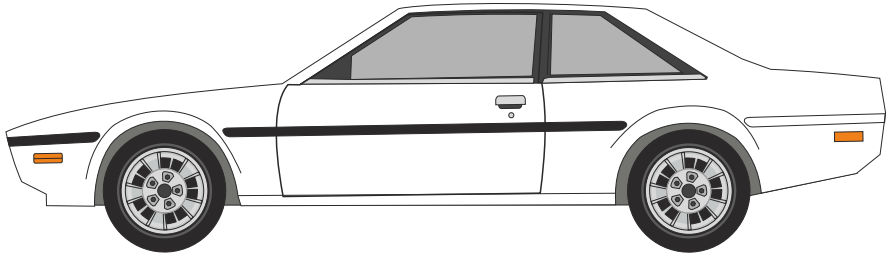

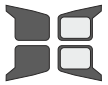

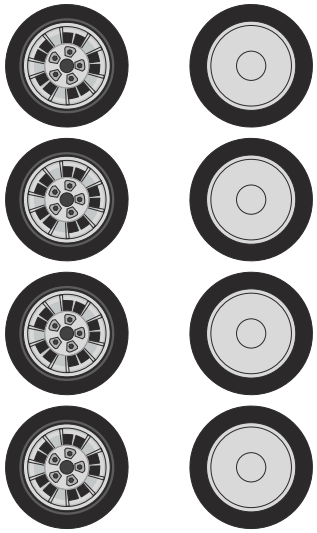

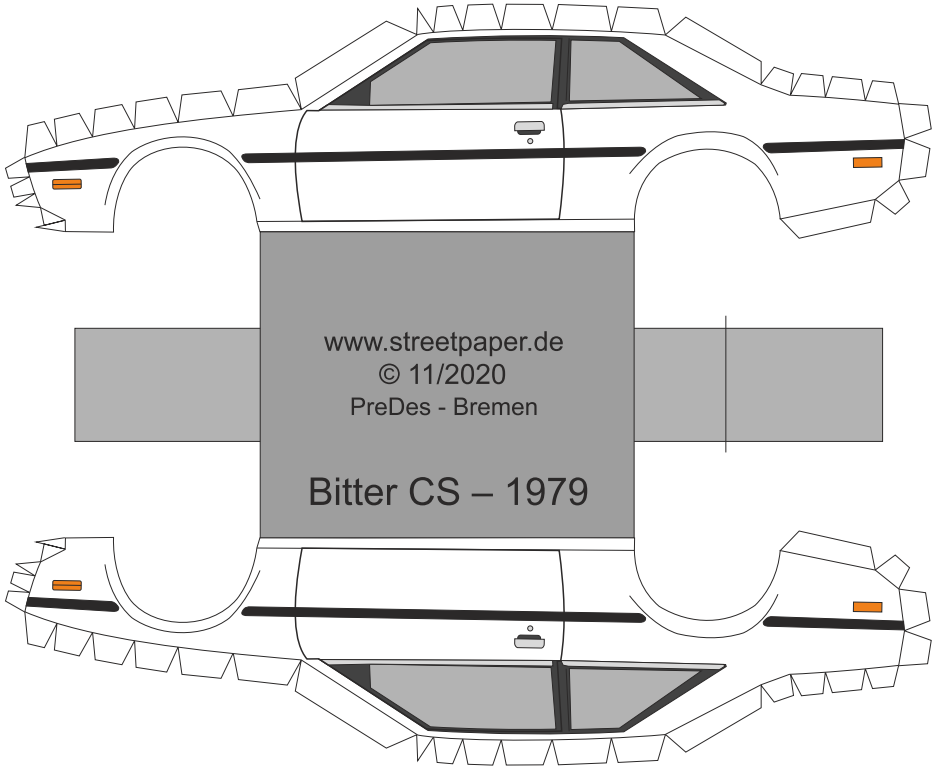
www.streetpaper.de
© 11/2020
PreDes - Bremen
Bitter CS – 1979

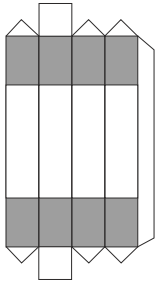

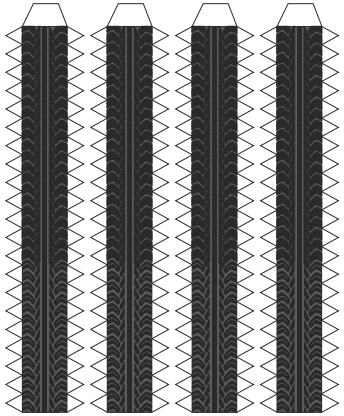

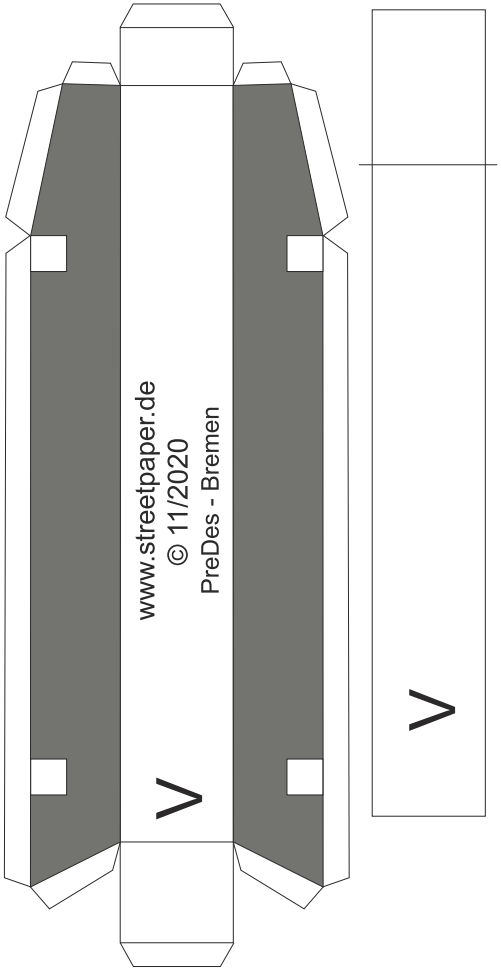
www.streetpaper.de
© 11/2020
PreDes - Bremen
V
V